فن کویل سقفی توکار - دو لوله

MLCC-2-2P-L

MANELLI CEILING CONCEALED FANCOIL
AIR FLOW: 2: 200CFM
COIL TYPE: 2P: 2PIPE 4P: 4PIPE
WATER PIPE CONNECTION DIRECTION: L: LEFT R: RIGHT

MANELLI Ceiling Concealed Fancoil- 2PIPE									
Model:	MLCC		MLCC-2	MLCC-3	MLCC-4	MLCC-5	MLCC-6	MLCC-8	MLCC-10
Air Flow	CFM		200	300	400	500	600	800	1000
Total Cooling Capacity	MAX	kW	2.2	2.8	3.7	4.6	5.5	7.3	9.0
	MED	kW	2.0	2.5	3.2	4.3	4.4	5.8	8.0
	MIN	kW	1.7	1.9	2.7	3.1	3.7	4.7	6.1
Sensible Cooling Capacity	MAX	kW	1.5	2.1	2.7	3.4	4.1	5.3	6.7
	MED	kW	1.3	1.7	2.3	3.1	3.4	4.3	5.8
	MIN	kW	1.0	1.3	1.8	2.1	2.5	3.1	4.2
Total Heating Capacity	MAX	kW	3.9	4.5	6.0	7.6	8.5	14.2	16.0
	MED	kW	3.4	3.9	5.2	6.6	7.3	12.2	13.9
	MIN	kW	2.2	2.5	3.3	4.3	4.6	7.7	8.7
Air Flow	MAX	m^3/h	340.0	510.0	680.0	850.0	1020.0	1360.0	1700.0
	MED	m^3/h	280.0	418.0	558.0	697.0	836.0	1115.0	1394.0
	MIN	m^3/h	170.0	255.0	340.0	425.0	510.0	680.0	850.0
Water Flow Rate	l/h		345.0	465.0	620.0	775.0	930.0	1240.0	1550.0
Water Pressure Drop	kPa		12.0	21.0	12.0	23.0	30.0	33.0	26.0
Water inlet/outlet pipe	inch		ZG3/4"	ZG3/4"	ZG3/4"	ZG3/4"	ZG3/4"	ZG3/4"	ZG3/4"
Sound Pressure	12Pa	dB(A)	37.0	39.0	41.0	43.0	45.0	46.0	48.0
	30Pa	dB(A)	40.0	42.0	44.0	46.0	47.0	48.0	50.0
	50Pa	dB(A)	42.0	44.0	46.0	47.0	49.0	50.0	52.0
Absorbed Power	12Pa	W	10.0	12.0	18.0	32.0	41.0	51.0	2 x 40
	30Pa	W	25.0	25.0	30.0	47.0	47.0	47.0 + 25.0	47.0 + 25.0
	50Pa	W	28.0	28.0	40.0	54.0	65.0	75.0	2 x 60
Electrical Supply	V-ph-Hz		220-1-50	220-1-50	220-1-50	220-1-50	220-1-50	220-1-50	220-1-50
Dimension & Weight									
W-2Pipe	mm		739.0	879.0	979.0	1059.0	1159.0	1489.0	1589.0
H-2Pipe	mm		250.0	250.0	250.0	250.0	250.0	250.0	250.0
D-2Pipe	mm		530.0	530.0	530.0	530.0	530.0	530.0	530.0
Weight	kg		13.9	16.5	19.3	20.5	21.8	32.0	35.2

1. Cooling: inlet air temp. DB+27°C/WB+19.5°C, water inlet/outlet temp. +7°C/+12°C
2. Heating: +21°C, water inlet temp. +60°C; Same water flow rate as for the cooling

Performance Data: 2 pipe, 3 rows

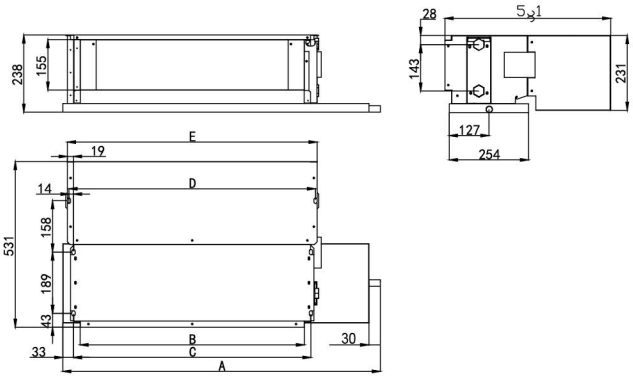

With plenum box / with AL air filter / air inlet from back side

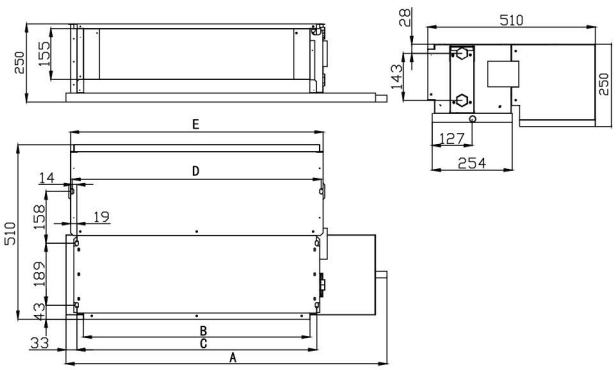

With plenum box / with AL air filter / air inlet from bottom side

Model	MLCC-2	MLCC-3	MLCC-4	MLCC-5	MLCC-6	MLCC-8	MLCC-10
A (Standard Drain Pan)	620	760	860	940	1040	1370	1470
A (Extended Drain Pan)	739	879	979	1059	1159	1489	1589
B	452	592	692	772	872	1202	1302
C	520	660	760	840	940	1270	1370
D	520	660	760	840	940	1270	1370
E	530	670	770	850	950	1280	1380